Data Sheet

Article number: 2301078532R
Description: E+G Handwheel
VRTP.100+IR-A12

Measures

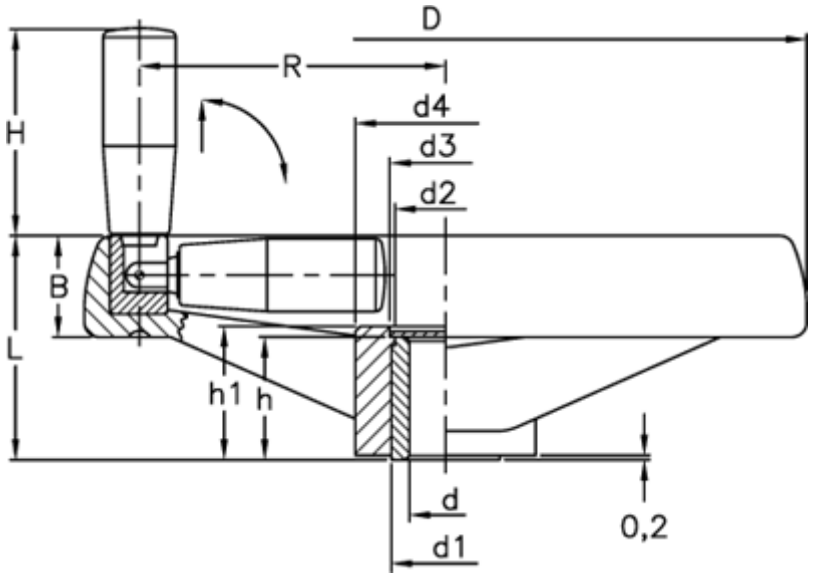

B	= 20	H	= 56
C (N m)	= 54	h	= 17
D	= 99	h1	= 19
d1	= 18	L	= 37
d2	= 16	L (J)	= 7
d3	= 17	R	= 37
d4	= 25		
d H7	= 12		

Product drawings and brochures of any kind may contain errors for which Brd. Klee A/S cannot be liable.